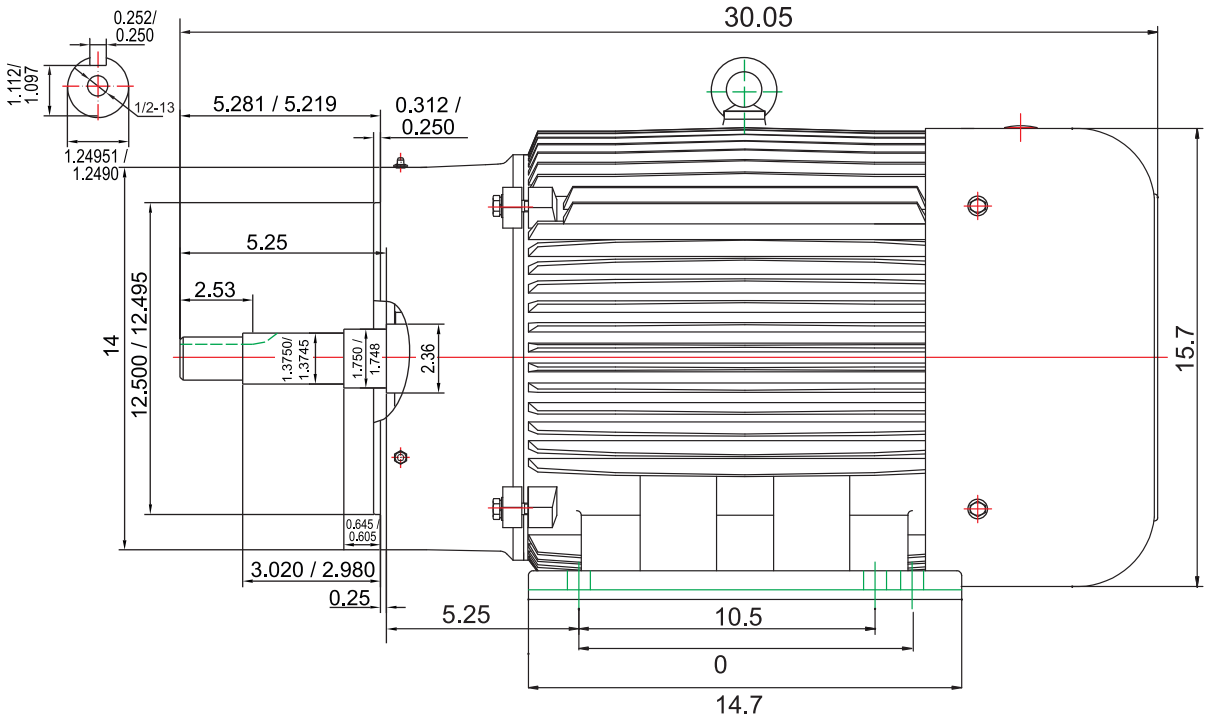

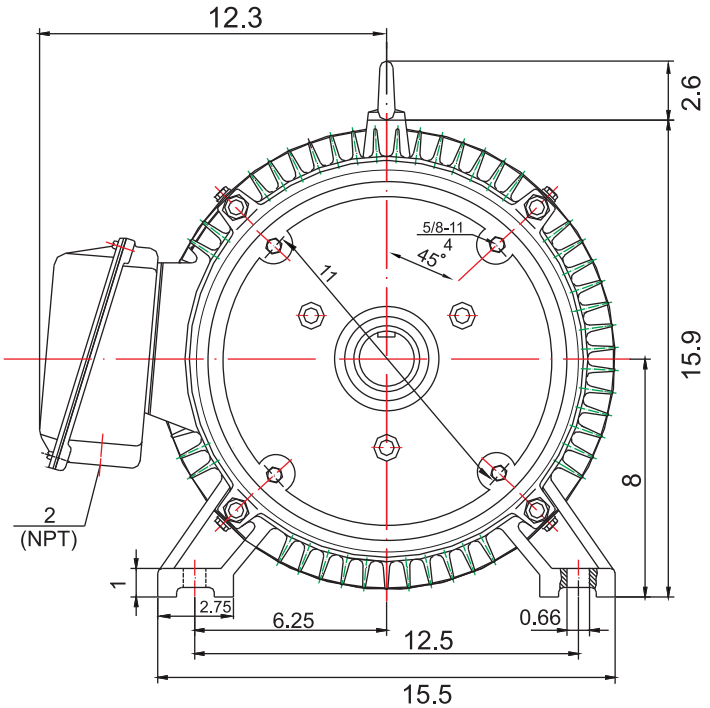

MaxMotion

Epact NEMA 12-11 Cast Iron T-Frame 324JM (3600 RPM 40HP)

Measurements are in inches. Drawing is not certified, please contact factory for certification.

www.mep.ca